Product Book

Paris Island Unit
05196
Edition 2-2019

REM (UK) Limited
Glenfield Mill,
Glenfield Road,
Nelson, Lancashire
BB9 8AW
T: +44 (0)1282 619 977
F: +44 (0)1282 619 617
E: sales@rem.co.uk
W: www.rem.co.uk

Made in Britain

remuksalons
remuklimited
remuklimited
remuklimited
remuklimited

Specification

Paris Island Unit
05196
Edition 2-2019

Product Name: Paris Styling Unit

Product Type: Styling Unit

Product Codes:
- 05196 - Paris Island Unit

Standard Equipment:
- Timber shelf with chrome holster and brackets

Optional Equipment:
- Double electric sockets

Main Construction:
- Timber construction finished in high pressure laminate from the REM laminate range
- 4mm mirror face with timber shelf.
- Grey central storage column

Finish:
- Any laminate from the REM swatch range

Features:
- Simple design
- Dryer holster
- Generous sized mirror

REM

Dimension

NOTE: sizes may vary slightly from shown

Paris Island Unit
05196
Edition 2-2019

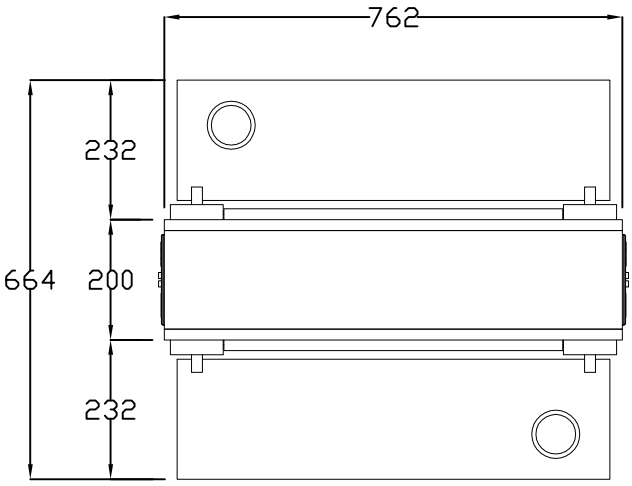

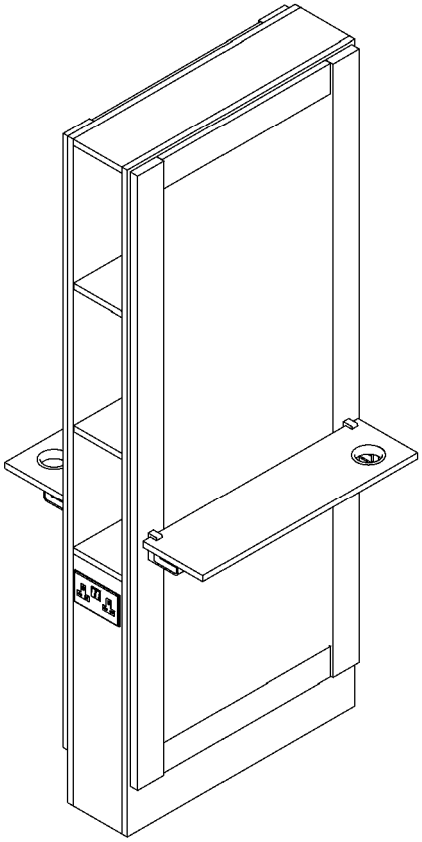

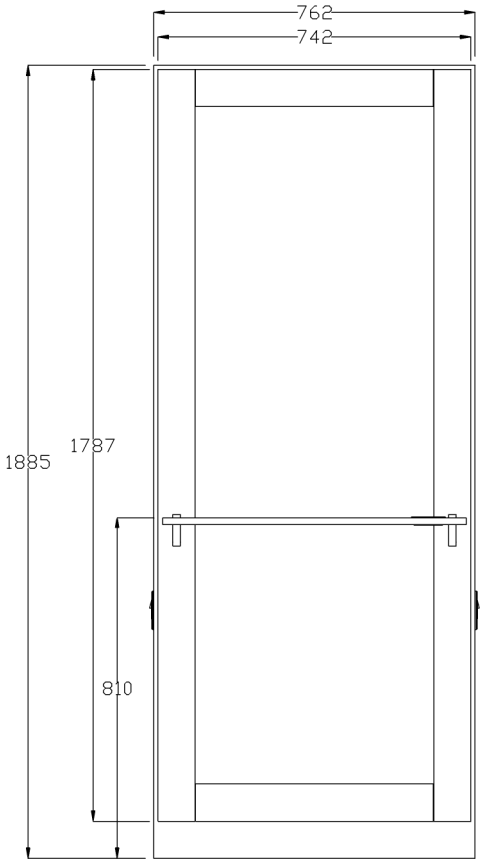

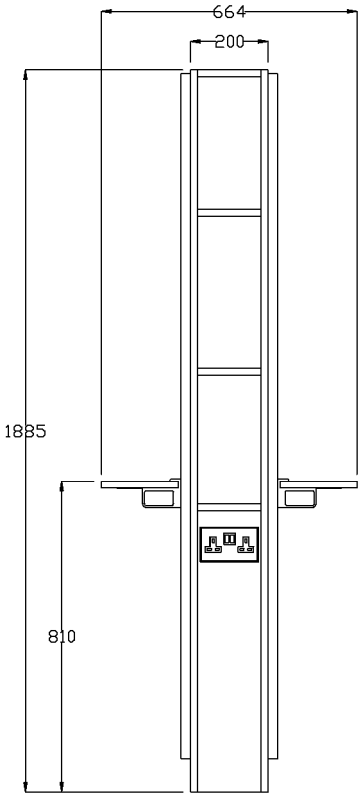

REM

Colour

Paris Island Unit
05196
Edition 2-2019

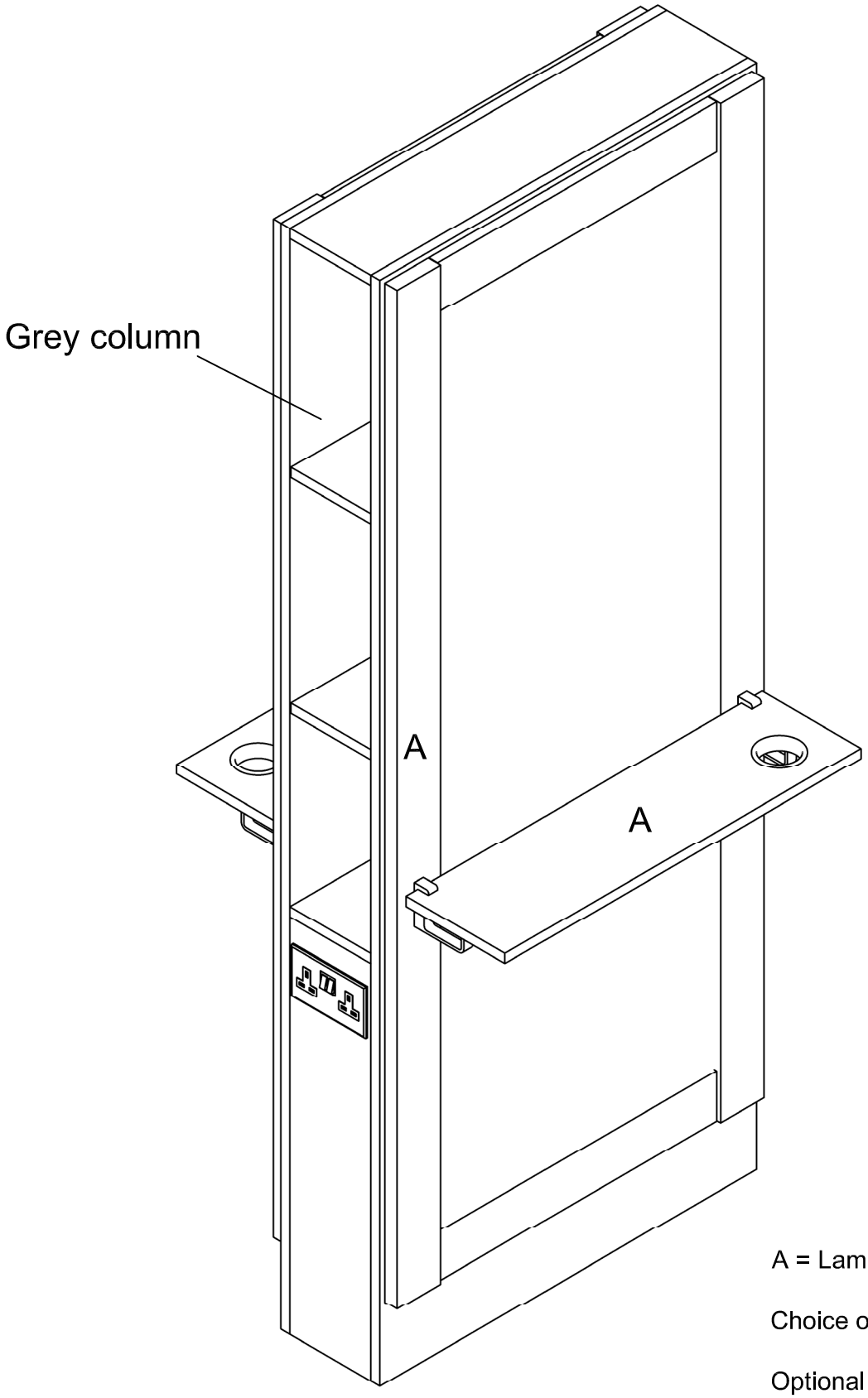

A = Laminate

Choice of REM laminates

Optional extras must be clearly detailed at time of order.

REM

Electric

Paris Island Unit
05196
Edition 2-2019

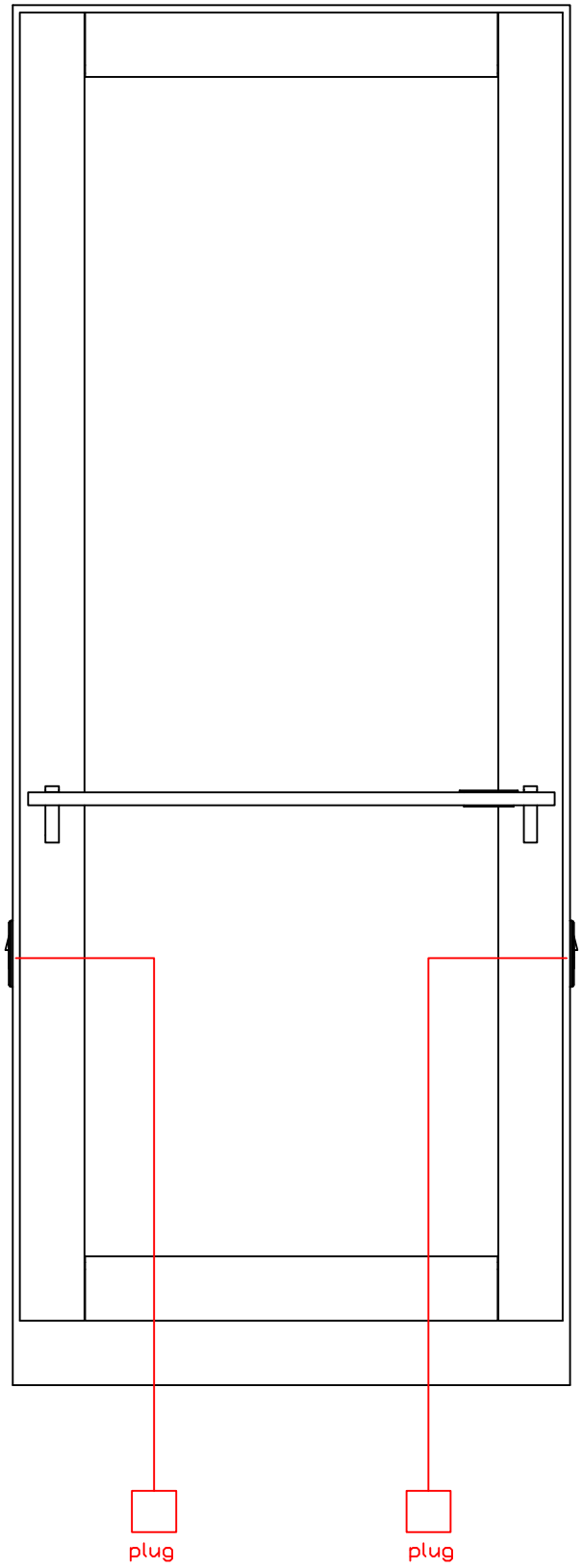

REM

Instruction

Paris Island Unit
05196
Edition 2-2019

NOTE: these are recommended fitting instructions. Please discuss our recommendations with a qualified furniture fitter.

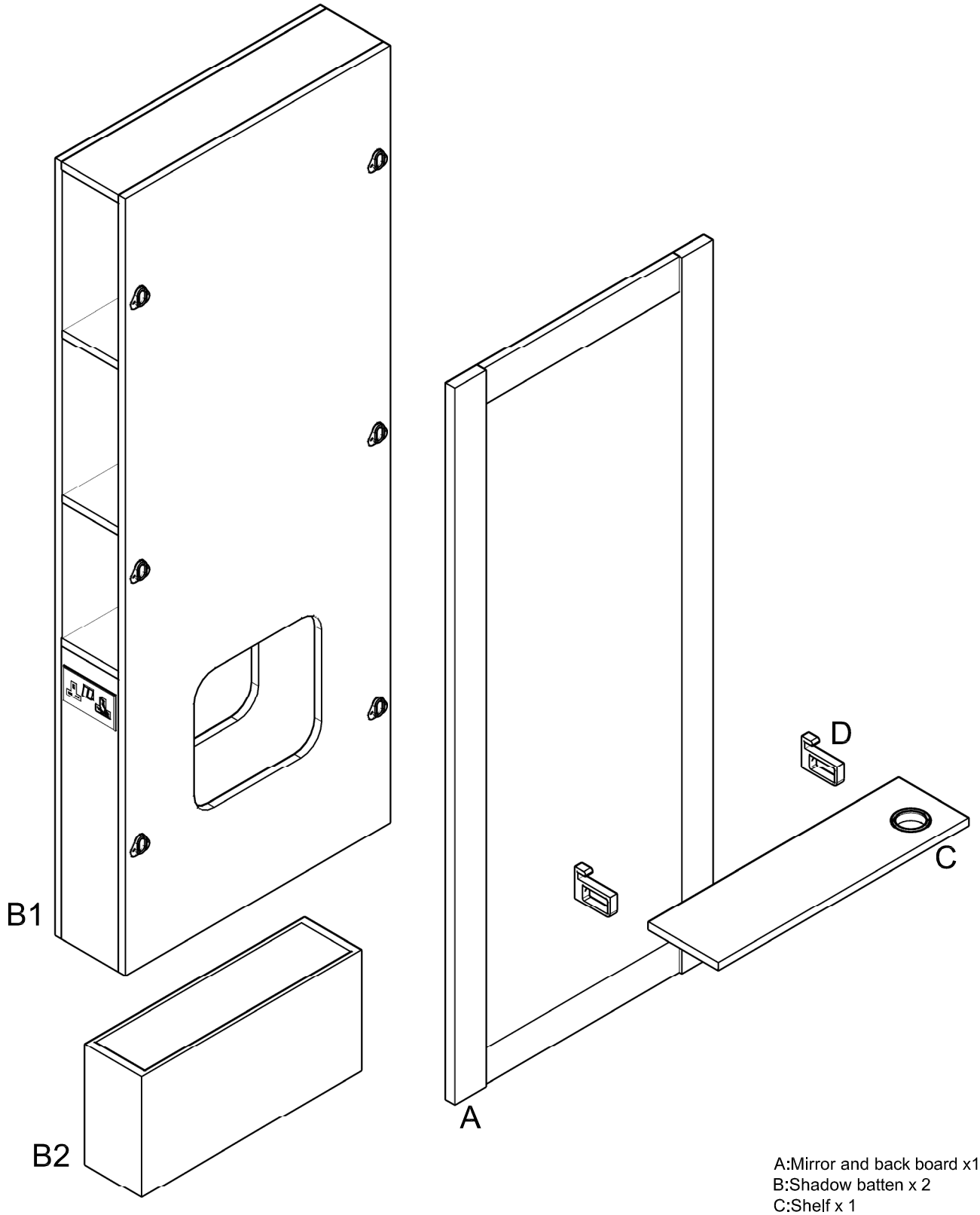

A:Mirror and back board x1
B:Shadow batten x 2
C:Shelf x 1
D:Shelf bracket x 2

NOT SHOWN:
E:Screws x 4

NOTE: ENSURE FIXING BLOCK IS SECURELY FIXED TO FLOOR

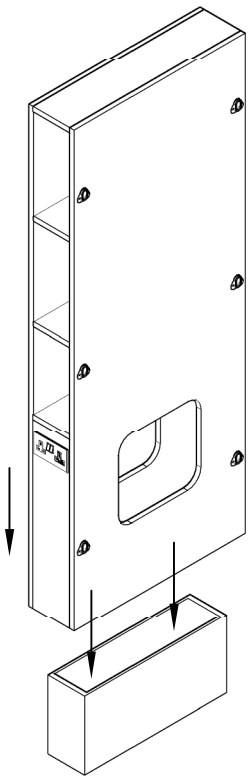

1. 2 person assembly process:
Secure Floor Fixing Block (B2) to floor in required location (no fixings provided. Carefully lower Island Column (B1) over Floor Fixing Block. All electrics to be installed by a qualified electrician.

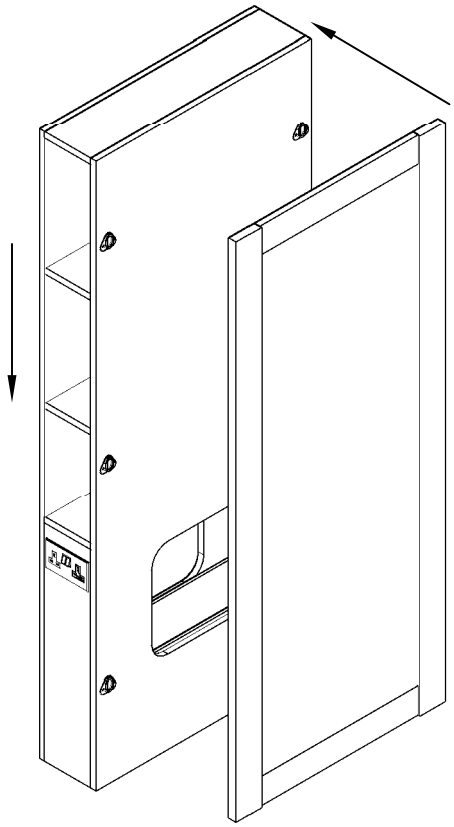

2. Recommended 2 person required for this operation:
Carefully place Paris Styling Unit (A) against Island Column, ease down until the battens meet and the unit is secure.

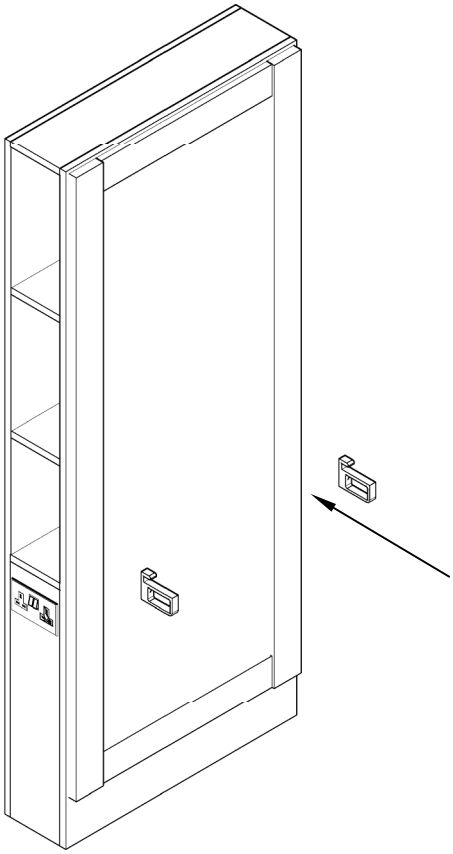

3. Fix Shelf Fixing Brackets (D) to unit using fixings provided (E).

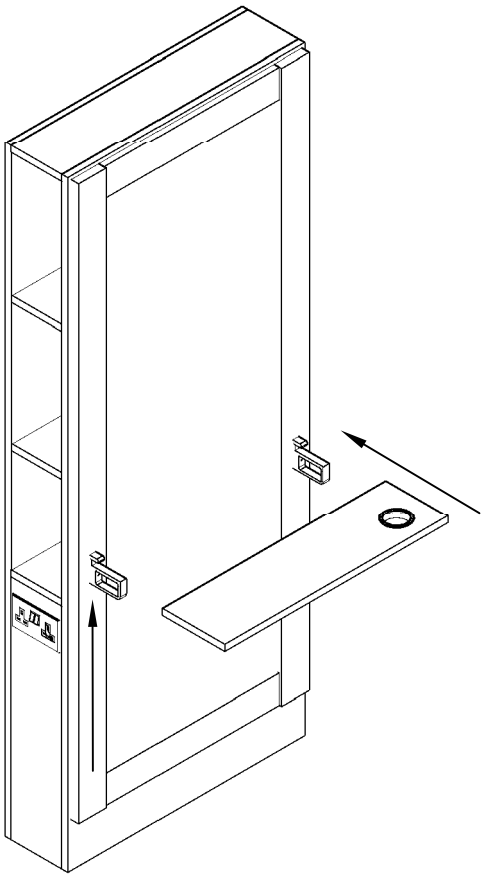

4. Insert shelf (C) into brackets and tighten from underside to secure in place.

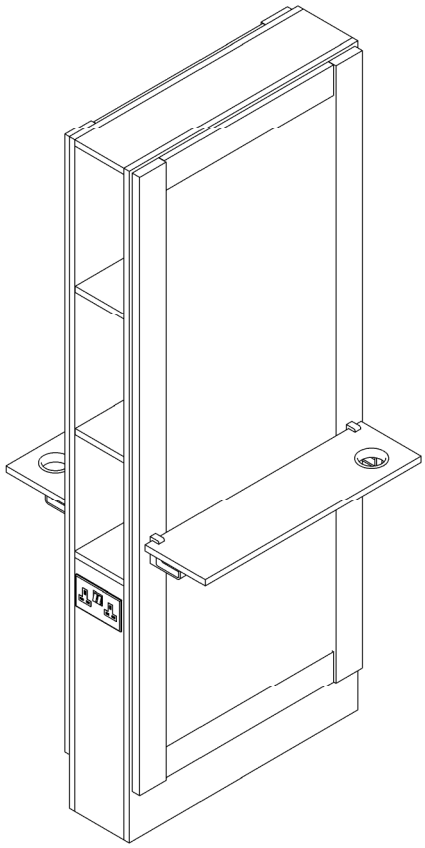

5. Repeat process for opposite side.
Unit complete

Declaration

Fabrics:
DECLARATION OF CONFORMITY OF CERTAIN FIRE RETARDANCY STANDARDS.

BS 7176 is the British Standard which specifies the requirements for the resistance to ignition of upholstered furniture manufactured for seating or similar usage, but excluding use on domestic furniture or transport seating. Tests have been carried out on all REM products and fabrics in accordance to BS EN 1021-1: 2006 and BS EN 1021-2: 2006 which satisfy the performance requirements of Low Hazard Category of BS 7176 (resistance to ignition sources: Smouldering Cigarette and Match Flame Equivalent).

Typical examples of furniture that are required to meet the Low Hazard Category are Schools, Colleges, Offices, and Day Centres.

All of the cloths the REM swatch are available on the majority of REM products and meet the Medium Hazard Category (Public Buildings, Restaurants, Hotel Bedrooms, Hospitals etc) of BS 7176 which is similar to the above but also includes the Ignition Source 5 test of BS 5852: 2006.

It should be noted also, that whilst the test levels for the various hazard categories are set after careful consideration of the particular end-user environments involved, they are not intended to reflect the behaviour of the upholstery in a fully developed fire. A label is available for use on items produced in accordance with this standard, although there is no legal requirement to attach said label. These can be supplied on request at the time of ordering (printed to suit Low and Medium Hazard Only).

All products are subject to availability. REM reserves the right, without further notice, to alter the material specification of our products, if necessary to provide the highest levels of product quality.

Laminate:
Each laminate shown in the REM swatch has been carefully selected from the Polyrey, Wilsonart & Egger Quality Collections of high pressure laminates (HPL). They can all be postformed (with the exception of Alu Brosse), and are suitable for commercial use. Please note that Matt Black has a tendency to fine scratching and finger marks when applied to horizontal working surfaces.

REM has made every effort to ensure that the Laminates presented in our swatch book are as the original. All products are subject to availability. REM reserves the right, without further notice, to alter the material specification of our products, if necessary to provide the highest levels of product quality.

Please ensure that you discuss any queries with our technical staff. For more colour ideas visit www.rem.co.uk.

NOTE
REM declines all responsibility for any injury to persons or damage to property caused by installation or assembly that has not been carried out in compliance with the general warnings, and the installation instructions of the pole/base and/or wall arm. REM declines all responsibility for any injury to persons or damage to property caused by installation or assembly carried out by non-qualified persons. REM declines all responsibility for injury or damage resulting from the unsuitability of the wall for the wall hood processor and arm only.

Environmental Protection

The crossed-out wheeled bin symbol which you will find on the Rating Plate attached to your product, or appearing in the Assembly/Operating Instructions, signifies an obligation by you as purchaser or owner, to dispose of the equipment in accordance with the European Directive 2002/96/EC. This is a statutory instrument commonly known as the 'WEEE Regulations', which effectively requires you to carry out disposals of all Electrical and Electronic Equipment separately from your usual waste facilities. Specialist waste controls, designated by the Government (or Local Authorities) are to be made available to prevent potentially harmful substances affecting the environment and causing a possible human/animal health risk.

More detailed information is available from your local Environmental Health Office, Local Authority Waste Disposal Service, or the sales point from which the product was originally purchased.

REM's Producer Registration Number is **WEE/BJ0066TW**

Declaration

Guarantee

A***What this Warranty Covers***
This warranty covers any product defects arising from faulty materials or workmanship; or defects arising from direct delivery transport damage. It is important to note that damages must be reported within 72 hours and are only covered for the address on the REM delivery note. Any issues relating to incorrect specification or missing components must be reported within 28 days from delivery.

What this Warranty Does Not Cover
Any problems arising from damage caused by misuse, failure to install correctly, damage caused during 3rd party transportation and storage, or fair wear and tear. (Goods delivered by the wholesaler or courier arranged by the wholesaler or end user will be classed as 3rd party transportation.)

What is the period of this Warranty?
This Warranty extends for a period of three years from date of purchase. Customers must retain their receipt from the supplying REM Distributor as proof of purchase. Any wholesaler stock items will be covered for three years, where applicable, from date of purchase from the wholesaler but exclude transport damage.

What we will do to correct problems
REM will, at its discretion, repair or replace defective products. During the first year of ownership for UK Mainland customers only, REM will supply and, at its discretions, fit replacement parts or products. In years 2 and 3 for UK Mainland customers and for years 1, 2 and 3 for all customers outside UK Mainland, REM will supply replacement parts or products at its cost.

What we will not do
REM will not be responsible for any associated costs of refitting or reinstalling any products which have been replaced nor will it be responsible for any costs incurred arising from the non-availability of its products awaiting repair or replacement.

How do you get service?
Should any problems arise with your REM product please use the REM Support Link which is found at http://www.remsupport.co.uk/ .

How does this affect my statutory rights?
This three year warranty in no way affects your statutory rights and is intended as an additional safeguard and benefit for buying and using REM products.

Notable Exceptions to the warranty
1. Miranda Dryer is covered by 12 month warranty only.
2. Rio Mag Lamp is covered by 12 month warranty only.
3. Apollo, Apollo Lux, Studio, Jupiter, Nero, Penta and Monet Trolleys are covered by 12 month warranty only.
4. Any repairs carried out by REM personnel or accredited REM engineers have a 3 month guarantee.

Other Exceptions to the warranty
1. Upholstered seats are covered by a 3 year warranty except for where cloth gathers or stretches under use.
2. Dryer Pole Wing Nuts are considered a wearable part and not covered by warranty.
3. Hoses for REM washpoints are considered a wearable part and not covered by warranty.
4. Handsets for REM electric couches are only covered by warranty for the first 12 months.
5. Stained Upholstery due to hair dye and other products are not covered by warranty.
6. Stained Upholstery due to denim or similar are not covered by warranty.
7. Stained work surfaces due to nail varnish and similar products are not covered by warranty.
8. Damaged glass components or mirrors are not covered under warranty unless the damage was occurred during delivery and reported within 72 hours.
9. Visors on REM Hood Dryer are covered by warranty for transit damage only.
10. Any items damaged in transit are only covered by warranty if delivered on REM vehicles or REM appointed subcontractors. Any items collected from REM by customers or where collection has been arranged by customers are not covered for any transit damage.
11. Any items purchased from REM Reconditioned stock, invoiced on a code beginning with 3045 are not covered by warranty.
12. Any items purchased from Ebay or similar are not covered by warranty.

REM Returns Policy
All defects arising from faulty materials or poor workmanship; or defects arising from transport damage will be returned to REM at no cost to the customer.

Where REM agree to replace a product, the replacement item will be charged to the customer's account. The returned unit will be credited in full once it has been received back at REM. In cases where the reported fault cannot be found, no credit will be authorised.

Unwanted goods, or items not meeting customer requirements; which are free from the defects listed above, un-used, and in its original packaging will be considered for credit by a duly appointed representative of REM. A minimum charge of £60 will apply and will be communicated before the returns order is processed.

Items manufactured to the specific requirements of the customer (such as made-to-order furniture and upholstery; and bespoke furniture) are non-returnable. If the item is faulty it will be replaced or repaired at REM's cost, as per our terms and conditions.

REM will attempt collection of an arranged return a maximum of two times at which point the customer/wholesaler will have to arrange their own transportation for the goods to be sent back to REM or the returns note will be cancelled and any charges on the note will be applied to the account.

Please ensure that you discuss any queries with our technical staff:
www.rem.co.uk
sales@rem.co.uk
customerservice@rem.co.uk
+44(0) 1282 619 917

©REM UK Limited